IF IN DOUBT ASK
DO NOT SCALE

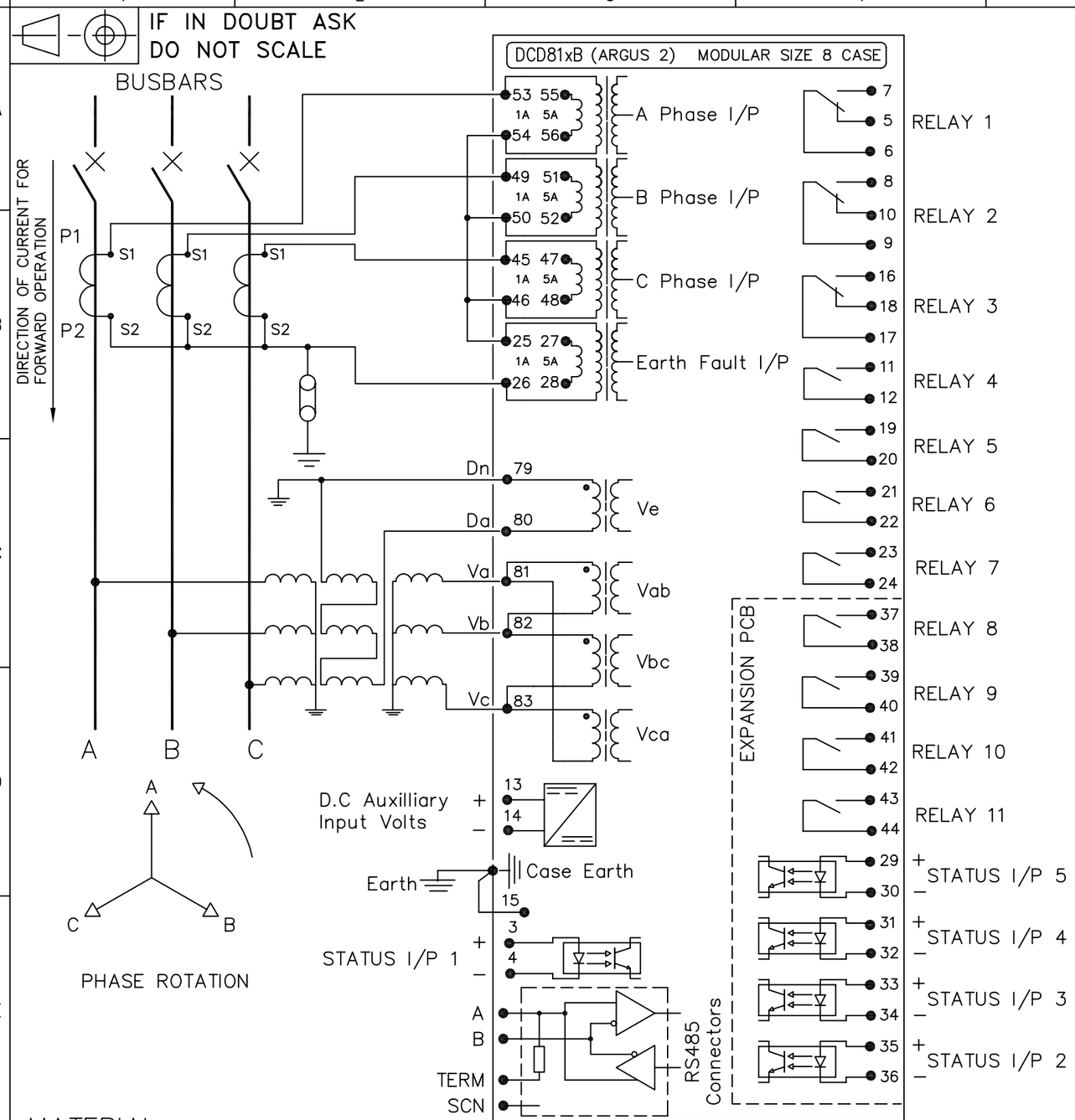

TERMINAL BLOCKS VIEWED FROM REAR

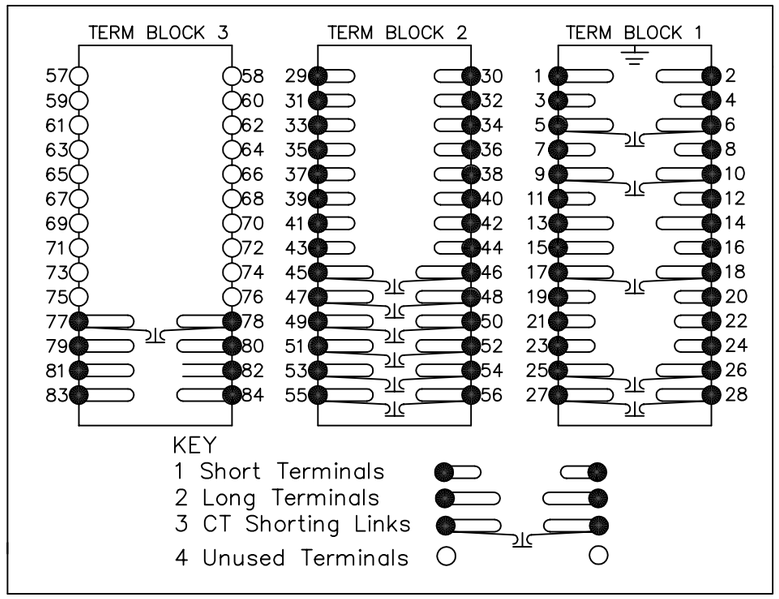

NOTES

1. CT CIRCUITS ARE SHOWN CONNECTED TO RELAY 1 AMP TAP. USE ALTERNATIVE TAP FOR 5AMP RATED CTs.
2. CT & EARTH CONNECTIONS ARE TYPICAL ONLY.
3. FOR TERMINAL DIAGRAM SEE 2434W50010 (A2).
4. DRG SHOWS OPTION B (11 OUTPUTS, 5 INPUTS).

NOT SUBJECT TO UPDATE ONCE COPIED / PRINTED OR DOWNLOADED

Copyright © 2007 Siemens Protection Devices Ltd. Hebburn

ISSUE	DATE	CHANGE NOTED
1	12.02/07	

MATERIAL:

Dimensions in millimetres : Surface texture in micrometres.
Machine where marked ✓
For explanation of dimensions, tolerances, notes etc. see B.S.308.
Limit on untoleranced unmachined dimensions ± _____
Limits on untoleranced machined dimensions to B.S.4500;
i.e. up to 6±0.1; over 30 to 120±0.3; over 315±0.8;
over 6 to 30±0.2; over 120 to 315±0.5;
General unmachined angular tolerance ± _____

Finish:

Treatment:

Title:
TYPICAL SCHEMATIC DIAGRAM 2PH(DIR)+EF(DIR) OR 3PF(DIR)+EF E8
110/P+5I/P RS485 ARGUS 2 NUMERIC OVERCURRENT PROTECTION

SIEMENS PROTECTION DEVICES LTD.

Original Scale. 1:1

First used on:
Similar Articles: 2434W10071
Supersedes:

Drg. No. 2434W10127

DRAWN	CHECKED	APPROVED	DATE	IE	OPS	PCP	Purch.Spec.	TQ	EAC	CE	STD	A3
ML/SK	RDW	RD.WATSON	12/02/07									

SIEMENS
siemens-russia.com